Small Form Pluggable (GBE CWDM SFP XD)
1.25Gbps 1270~1610nm CWDM DFB Transceiver
Link Budget: 19 dB (40km)

AB-GLC-CWDM-xx-XD
Ver. A

Feature

- Compliant with SFP MultiSource Agreement.
- 1.0625Gbps Fiber Channel Compliant
- 1.25Gbps Gigabit Ethernet Compliant
- Single 3.3V Power Supply Voltage
- For SMF 40km transmission
- Class 1 laser product
- RoHS Compliance

Application

- Router / Server interface
- Distributed multi-processing
- Switch to switch interface
- High speed I/O for file server

Absolute Maximum Rating

PARAMETER	SYMBOL	MIN	MAX	UNIT
Storage Temperature	T_S	–40	85	°C
Supply Voltage	Vcc	-0.5	3.6	V
Input Voltage	V_{IN}	0	*Vcc*	V
Operating Humidity		5	95	%

Recommended Operating Condition

PARAMETER	SYMBOL	MIN	MAX	UNIT	NOTE
Ambient Operating Temperature	T_{AMB}	0	70	°C	
Supply Voltage	*Vcc*	3.1	3.5	V	
Supply Current (3.3V)	$I_{TX} + I_{RX}$		300	mA	

AIBAO reserves the right to make changes in the specification described hereinafter without prior notice.

AIBAO INTERNATIONAL LTD.
No.77, Shengli 6th St., Jhubei City,
Hsinchu County 302, Taiwan R.O.C.
Tel: +886-3-657-6363 Fax: +886-3-657-6963
http://www.aibaotech.com

Absolute Maximum Ratings Transmitter Electro-optical Characteristic

***Vcc* = 3.1 V to 3.5V, T_A = 0 °C to 70 °C**

PARAMETER	SYMBOL	MIN	TYP.	MAX	UNIT	NOTE
Output Optical Power 9/125 μm fiber	P_{out}	-5		0	dBm	
Extinction Ratio	ER	8.2			dB	
Center Wavelength	λ_C	λ_C-6.5	λ_C	λ_C+7	nm	
Spectral Width (-20 dB)	$\Delta\lambda$			1	nm	
Side Mode Suppression Ratio	SMSR			30	dB	
Rise/Fall Time, (20–80%)	$T_{r,f}$			260	ps	
Total Jitter	TJ			227	ps	
Output Eye	Compliant with IEEE802.3z					
Differential Data Input Swing	V_{IN}	400		2000	mV	
Tx_Fault - High	V_{Fault_H}	2		V_{CC}	V	
Tx_Fault - Low	V_{Fault_L}	Vee		Vee+0.5	V	
Tx_Disable - High	$V_{Disable_H}$	2		V_{CC}	V	
Tx_Disable - Low	$V_{Disable_L}$	Vee		Vee+0.8	V	

Receiver Electro-optical Characteristic

***Vcc* = 3.1 V to 3.5 V, T_A = 0 °C to 70 °C**

PARAMETER	SYMBOL	MIN	TYP.	MAX	UNIT	NOTE
Optical Input Power-maximum	P_{IN}	-3			dBm	BER < 10^{-12}
Optical Input Power-minimum (Sensitivity)	P_{IN}			-24	dBm	BER < 10^{-12}
Operating Center Wavelength	λ_C	1100		1600	nm	
Loss of signal -Asserted	P_A	–35			dBm	
Loss of signal -Deasserted	P_D			–24.5	dBm	
Signal Detect Hysteresis	P_{HYS}	0.5	2		dB	
Return Loss	ORL	12			dB	
Receiver Loss of Signal Output Voltage-Low	RX_LOS_L	0		0.8	V	
Receiver Loss of Signal Output Voltage-High	RX_LOS_H	2.0		V_{CC}	V	

AIBAO reserves the right to make changes in the specification described hereinafter without prior notice.

AIBAO INTERNATIONAL LTD.
No.77, Shengli 6th St., Jhubei City,
Hsinchu County 302, Taiwan R.O.C.
Tel: +886-3-657-6363 Fax: +886-3-657-6963
http://www.aibaotech.com

Timing Requirement

***Vcc* = 3.1 V to 3.5 V, T_A = 0 °C to 70 °C**

PARAMETER	SYMBOL	MIN	TYP.	MAX	UNITS	NOTE
TX_DISABLE Assert Time	t_off			10	μs	
TX_DISABLE Negate Time	t_on			1	ms	
Time to initialize, include reset of TX_FAULT	t_init			300	ms	
TX_FAULT from fault to assertion	t_fault			100	μs	
TX_DISABLE time to start reset	t_reset	10			μs	
Receiver Loss of Signal Assert Time (off to on)	t_{A,RX_LOS}			100	μs	
Receiver Loss of Signal Assert Time (on to off)	t_{D,RX_LOS}			100	μs	

Pin Assignment

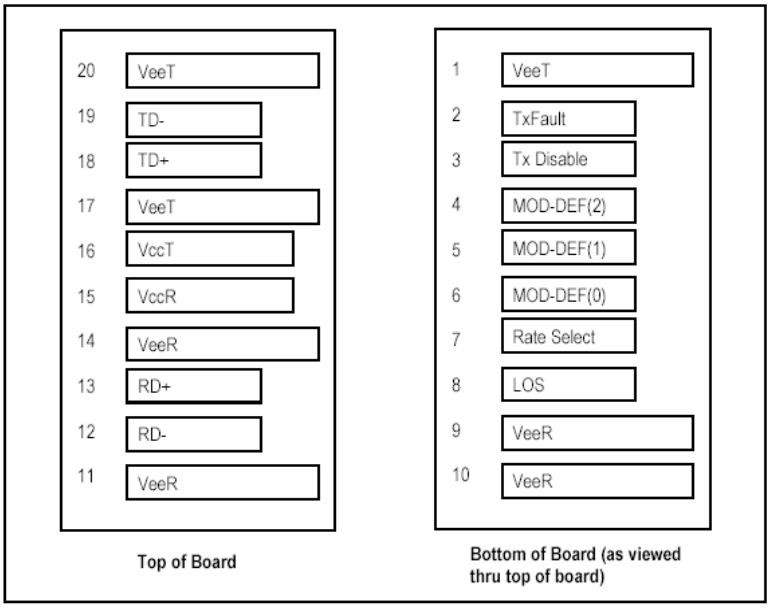

SFP Transceiver Electric Pad Layout

AIBAO reserves the right to make changes in the specification described hereinafter without prior notice.

Aibaotech

AIBAO INTERNATIONAL LTD.
No.77, Shengli 6th St., Jhubei City,
Hsinchu County 302, Taiwan R.O.C.
Tel: +886-3-657-6363 Fax: +886-3-657-6963
http://www.aibaotech.com

Pin Function Definition

Pin Num.	Name	Function	Plug Seq.	Note
1	VeeT	Transmitter Ground	1	Note 7
2	Tx_Fault	Transmitter Fault Indication	3	Note 1
3	Tx_Disable	Transmitter Disable	3	Note 2 Module disables on high or open
4	MOD_DEF2	Module Definition 2	3	Note 3, 2 wire serial ID interface
5	MOD_DEF1	Module Definition 1	3	Note 3, 2 wire serial ID interface
6	MOD_DEF0	Module Definition 0	3	Note 3, Grounded in Module
7	NC	NC	3	No Connection
8	Rx_LOS	Loss of Signal	3	Note 4
9	VeeR	Receiver Ground	1	Note 7
10	VeeR	Receiver Ground	1	Note 7
11	VeeR	Receiver Ground	1	Note 7
12	RD-	Inv. Received Data Out	3	Note 5
13	RD+	Received Data Out	3	Note 5
14	VeeR	Receiver Ground	1	Note 7
15	VccR	Receiver Power	2	3.3 ± 5%, Note 6
16	VccT	Transmitter Power	2	3.3 ± 5%, Note 6
17	VeeT	Transmitter Ground	1	Note 7
18	TD+	Transmit Data In	3	Note 8
19	TD-	Inv. Transmit Data In	3	Note 8
20	VeeT	Transmitter Ground	1	Note 7

Note 1 : Tx_Fault is an open collector/drain output, which should be pulled up with a 4.7K – 10KΩ resistor on the host board. Pull up voltage between 2.0V and VccT, R+0.3V. When high, output indicates a laser fault of some kind. Low indicates normal operation. In the low state, the output will be pulled to < 0.8V.
Note 2: Tx_Disable is an input that is used to shut down the transmitter optical output. It is pulled up within the module with a 4.7 – 10 KΩ resistor.
Note 3: Mod-Def 0,1,2. These are the module definition pins. They should be pulled up with a 4.7K –10KΩ resistor on the host board.
Note 4: Rx_LOS (Loss of Signal) is an open collector/drain output, which should be pulled up with a 4.7K – 10KΩ resistor. Pull up voltage between 2.0V and VccT, R+0.3V. When high, this output indicates the received optical power is below the worst-case receiver sensitivity. Low indicates normal operation. In the low state, the output will be pulled to < 0.8V.
Note 5: These are the differential receiver outputs. They are AC coupled 100Ω differential lines which should be terminated with 100Ω (differential) at the user SERDES.
Note 6: VccR and VccT are the receiver and transmitter power supplies. They are defined as 3.3V ±5% at the SFP connector pin. Recommended host board power supply filtering is shown below.
Note 7: VeeR and VeeT may be internally connected within the SFP module.
Note 8: These are the differential transmitter inputs. They are AC-coupled, differential lines with 100Ω differential termination inside the module.

AIBAO reserves the right to make changes in the specification described hereinafter without prior notice.

AIBAO INTERNATIONAL LTD.
No.77, Shengli 6th St., Jhubei City,
Hsinchu County 302, Taiwan R.O.C.
Tel: +886-3-657-6363 Fax: +886-3-657-6963
http://www.aibaotech.com

Recommended Host Board Supply Filtering Network

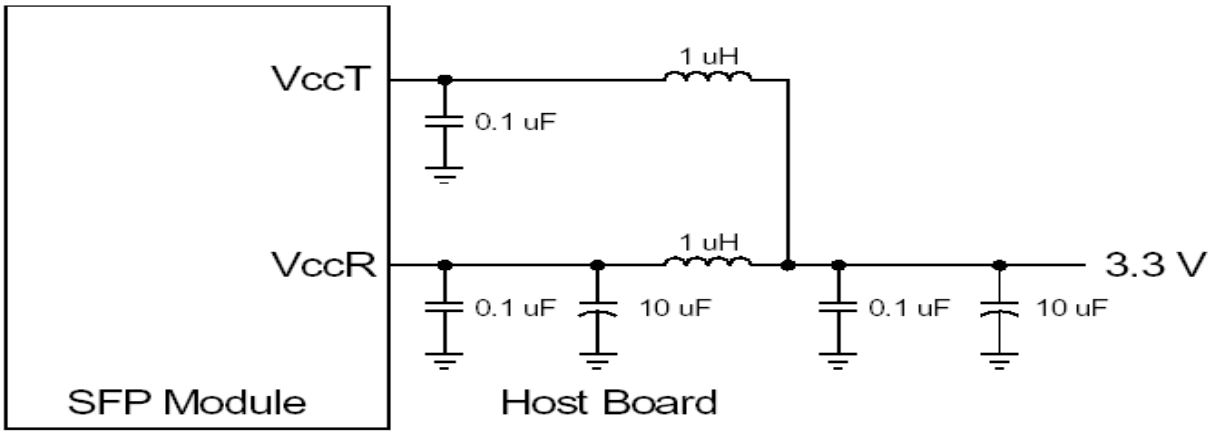

Suggest Transceiver / Host Interface

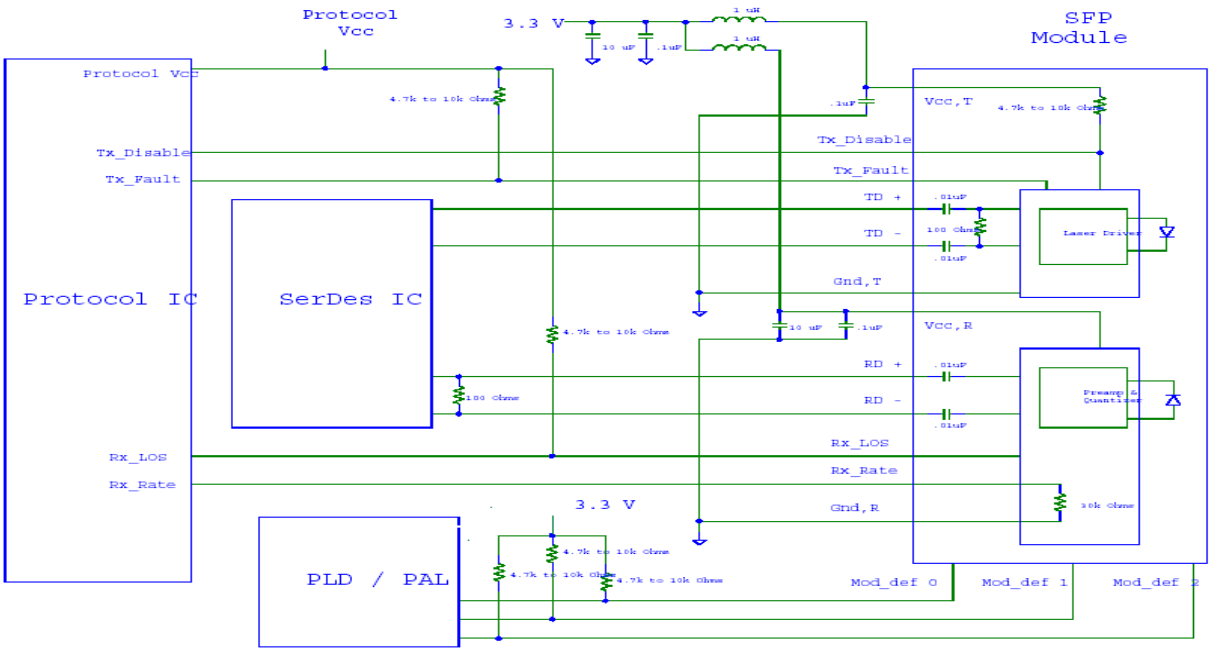

AIBAO reserves the right to make changes in the specification described hereinafter without prior notice.

AIBAO INTERNATIONAL LTD.
No.77, Shengli 6th St., Jhubei City,
Hsinchu County 302, Taiwan R.O.C.
Tel: +886-3-657-6363 Fax: +886-3-657-6963
http://www.aibaotech.com

Dimensions (mm): Housing 1

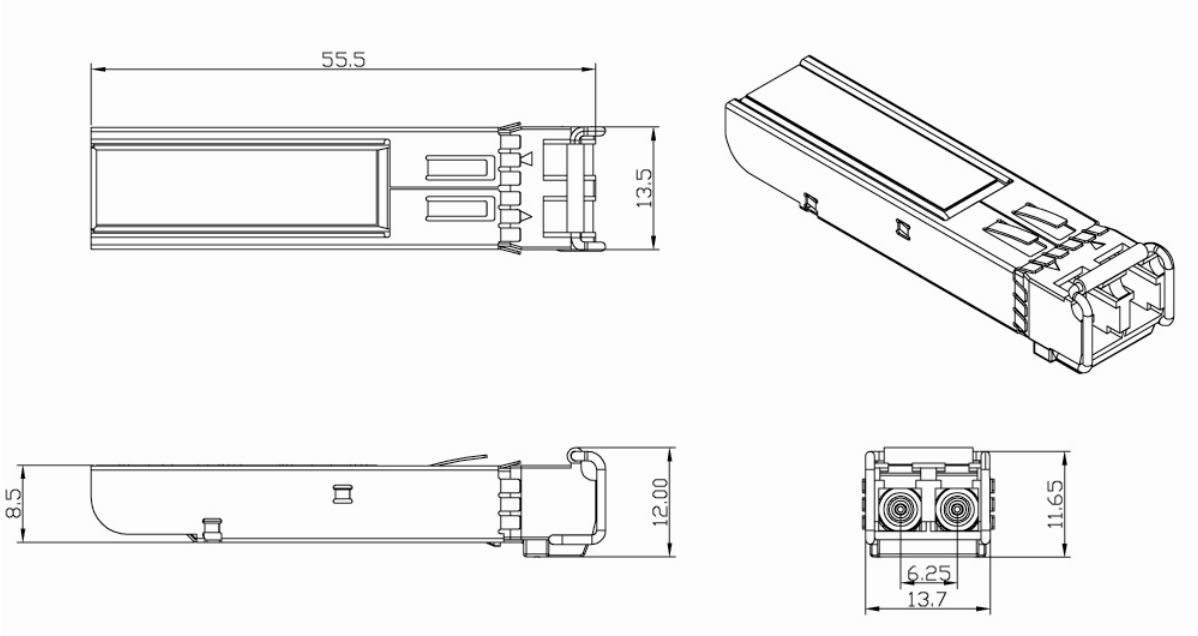

Dimensions (mm): Housing 2

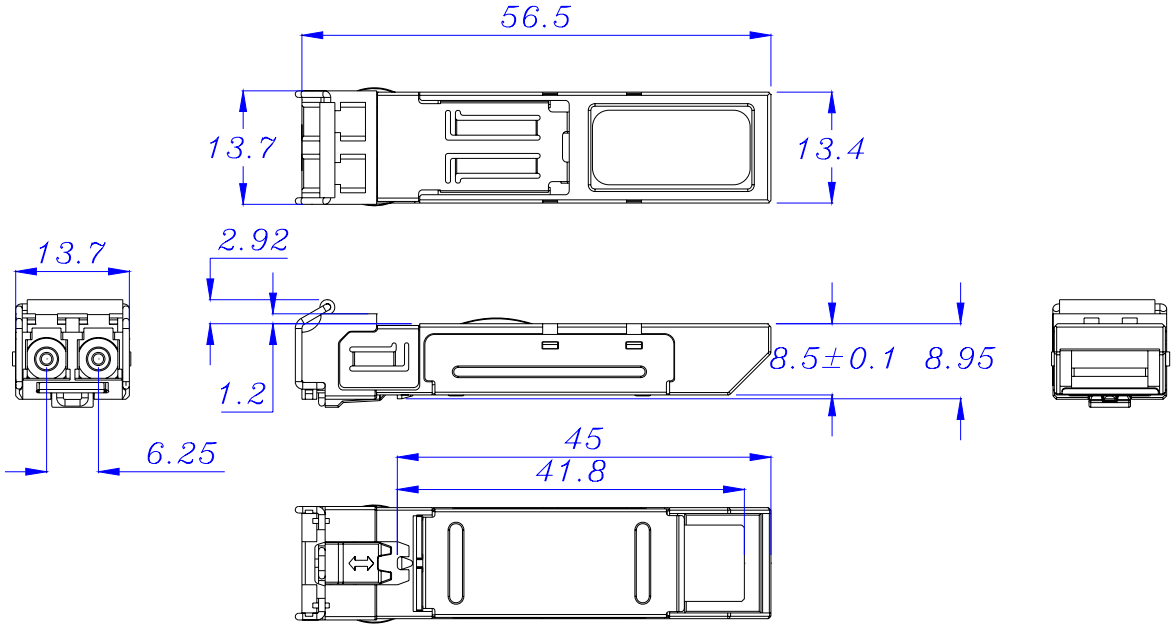

AIBAO reserves the right to make changes in the specification described hereinafter without prior notice.

AIBAO INTERNATIONAL LTD.
No.77, Shengli 6th St., Jhubei City,
Hsinchu County 302, Taiwan R.O.C.
Tel: +886-3-657-6363 Fax: +886-3-657-6963
http://www.aibaotech.com

Small Form Pluggable (GBE CWDM SFP XD)
1.25Gbps 1270~1610nm CWDM DFB Transceiver
Link Budget: 19 dB (40km)

AB-GLC-CWDM-xx-XD
Ver. A

Order Information

Aibaotch Part Number	Wavelength & Latch Color	Aibaotch Part Number	Wavelength & Latch Color
AB-GLC-CWDM-27-XD	CWDM 1270nm; Blue	AB-GLC-CWDM-47-XD	CWDM 1470nm; Gray
AB-GLC-CWDM-29-XD	CWDM 1290nm; Blue	AB-GLC-CWDM-49-XD	CWDM 1490nm; Violet
AB-GLC-CWDM-31-XD	CWDM 1310nm; Blue	AB-GLC-CWDM-51-XD	CWDM 1510nm; Blue
AB-GLC-CWDM-33-XD	CWDM 1330nm; Blue	AB-GLC-CWDM-53-XD	CWDM 1530nm; Green
AB-GLC-CWDM-35-XD	CWDM 1350nm; Blue	AB-GLC-CWDM-55-XD	CWDM 1550nm; Yellow
AB-GLC-CWDM-37-XD	CWDM 1370nm; Blue	AB-GLC-CWDM-57-XD	CWDM 1570nm; Orange
AB-GLC-CWDM-39-XD	CWDM 1390nm; Blue	AB-GLC-CWDM-59-XD	CWDM 1590nm; Red
AB-GLC-CWDM-41-XD	CWDM 1410nm; Blue	AB-GLC-CWDM-61-XD	CWDM 1610nm; Brown
AB-GLC-CWDM-43-XD	CWDM 1430nm; Blue		
AB-GLC-CWDM-45-XD	CWDM 1450nm; Blue		

Safety Information

- All versions of this laser are Class 1 laser products per IEC* 60825-1:2001. Users should observe safety precautions such as those recommended by ANSI** Z136.1-2000, ANSI Z36.2-1997 and IEC 60825-1:2001.
- Caution: use of controls or adjustments or performance of procedures other than those specified herein may result in hazardous radiation exposure.

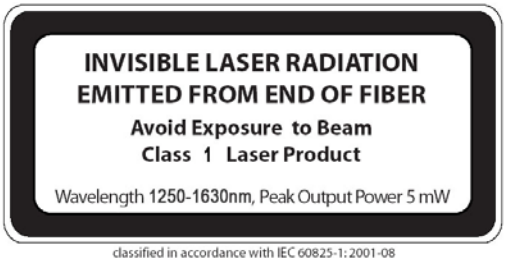

*IEC is a registered trademark of the International Electrotechnical Commission

**ANSI is a registered trademark of the American National Standards Institute

AIBAO reserves the right to make changes in the specification described hereinafter without prior notice.

AIBAO INTERNATIONAL LTD.
No.77, Shengli 6th St., Jhubei City,
Hsinchu County 302, Taiwan R.O.C.
Tel: +886-3-657-6363 Fax: +886-3-657-6963
http://www.aibaotech.com