10Gb/s Multirate DDMI XFP (XFP LR)
1310nm uncooled DFB with PIN Receiver
10km transmission distance

AB-XFP-LR-OC192
Ver. A

Feature

- 10Gb/s serial optical interface compliant to 802.3ae
- Uncooled 1310nm DFB transmitter and Pin photodiode receiver
- XFP Mechanical interface with bail latch and hot pluggable
- XFI High Speed Electrical Interface
- 2-wire interface for management and digital diagnostic monitor
- Low Power Consumption, Single +3.3V Power supply
- Operating case temperature: 0 to 70 °C
- All-metal housing for superior EMI performance
- Advanced firmware allow customer system encryption information to be stored in transceiver

Application

- SONET(OC-192)/SDH(STM64) line card
- 10GBASE-LR (10.3125Gbps)
- 10GBASE-LW (9.953Gbps)

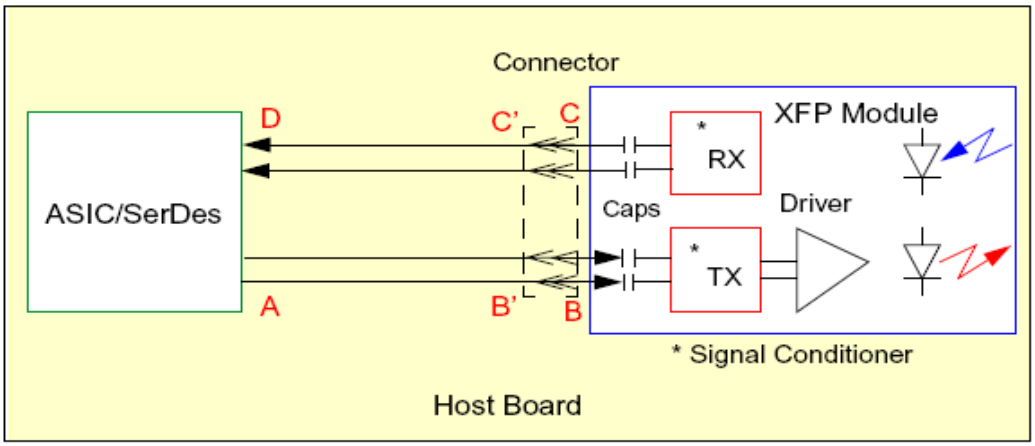

Figure 1: Interface to Host

AIBAO reserves the right to make changes in the specification described hereinafter without prior notice.

AIBAO INTERNATIONAL LTD.
No.77, Shengli 6th St., Jhubei City,
Hsinchu County 302, Taiwan R.O.C.
Tel: +886-3-657-6363 Fax: +886-3-657-6963
http://www.aibaotech.com

General Description

The AB-XFP-LR-OC192 is a very compact 10Gb/s optical transceiver module for serial optical communication applications at 10Gb/s. The AB-XFP-LR-OC192 converts a 10Gb/s serial electrical data stream to 10Gb/s optical output signal and a 10Gb/s optical input signal to 10Gb/s serial electrical data streams. The high speed 10Gb/s electrical interface is fully compliant with XFI specification and allows FR4 host PCB trace up to 200mm.

The AB-XFP-LR-OC192 is designed for use in a variety of 10Gb/s SONET/SDH equipment including FEC (9.95Gb/s to 10.7Gb/s) and Ethernet LAN (10.3Gb/s) and WAN (9.95Gb/s) applications. The high performance uncooled 1310nm DFB-LD transmitter and high sensitivity PIN receiver provide superior performance for SONET /SDH and Ethernet applications at up to 10km links. The fully XFP compliant form factor provides hot pluggability, easy optical port upgrades and low EMI emission.

Functional Description

The AB-XFP-LR-OC192 contains a duplex LC connector for the optical interface and a 30-pin connector for the electrical interface. Chart of section 3 shows the functional block diagram of AB-XFP-LR-OC192 Transceiver.

Transmitter Operation

The transceiver module receives 10Gb/s electrical data and transmits the data as an optical signal. The transmitter contains a Clock Data Recovery (CDR) circuit that reduces the jitter of received signal and reshapes the electrical signal before the electrical to optical (E-O) conversion. The optical output power is maintained constant by an automatic power control (APC) circuit. The transmitter output can be turned off by TX disable signal, at TX_DIS pin. When TX_DIS is asserted high, the transmitter is turned off.

Receiver Operation

The received optical signal is converted to serial electrical data signal. The optical receiver contains a CDR circuits that reshapes and retimes an electrical signal before sending out to the XFI channel (i.e. XFP connector and high speed signal traces). The RX_LOS signal indicates insufficient optical power for reliable signal reception at the receiver.

AIBAO reserves the right to make changes in the specification described hereinafter without prior notice.

AIBAO INTERNATIONAL LTD.
No.77, Shengli 6th St., Jhubei City,
Hsinchu County 302, Taiwan R.O.C.
Tel: +886-3-657-6363 Fax: +886-3-657-6963
http://www.aibaotech.com

Management Interface

A 2-wire interface (SCL, SDA) is used for serial ID, digital diagnostics and other control /monitor functions. The address of XFP transceiver is 1010000x. MOD_DESEL signal can be used in order to support multiple XFP modules on the same 2-wire interface bus. Interface is compliant to XFP MSA.

Recommended Electrical Interface to Host

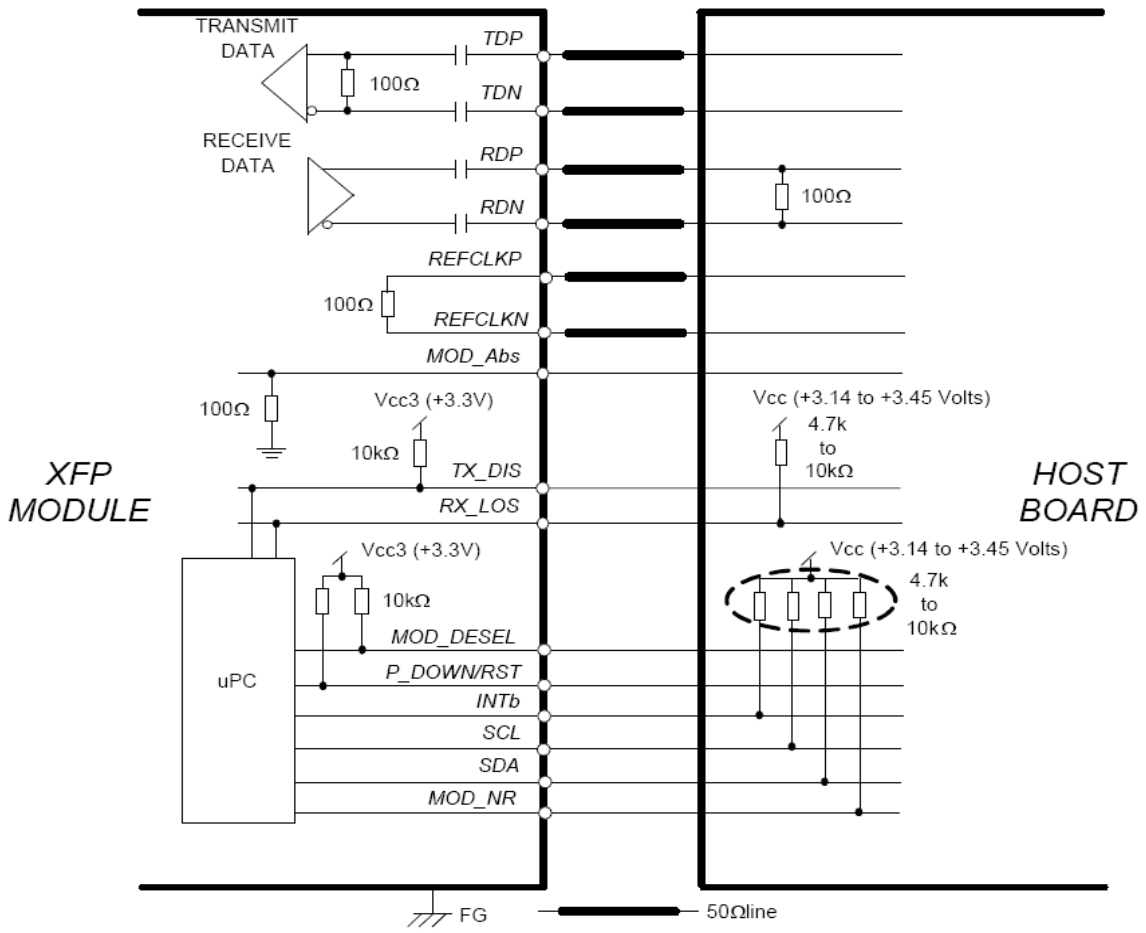

AIBAO reserves the right to make changes in the specification described hereinafter without prior notice.

AIBAO INTERNATIONAL LTD.
No.77, Shengli 6th St., Jhubei City,
Hsinchu County 302, Taiwan R.O.C.
Tel: +886-3-657-6363 Fax: +886-3-657-6963
http://www.aibaotech.com

PIN DEFINITION

The XFP modules are hot-pluggable. Hot pluggable refers to plugging in or unplugging a module while the host board is powered. The XFP host connector is based on a 0.8 mm pitch 30 position right angle connector. Host PCB pin assignment is given by Figure 2 and pin definition are listed in Table 2. All XFP compliance points are defined using this connector. An improved version of this connector will be available from Tyco and possibly from other sources. It is recommended that host systems use the new improved connector for better signal integrity and EMI.

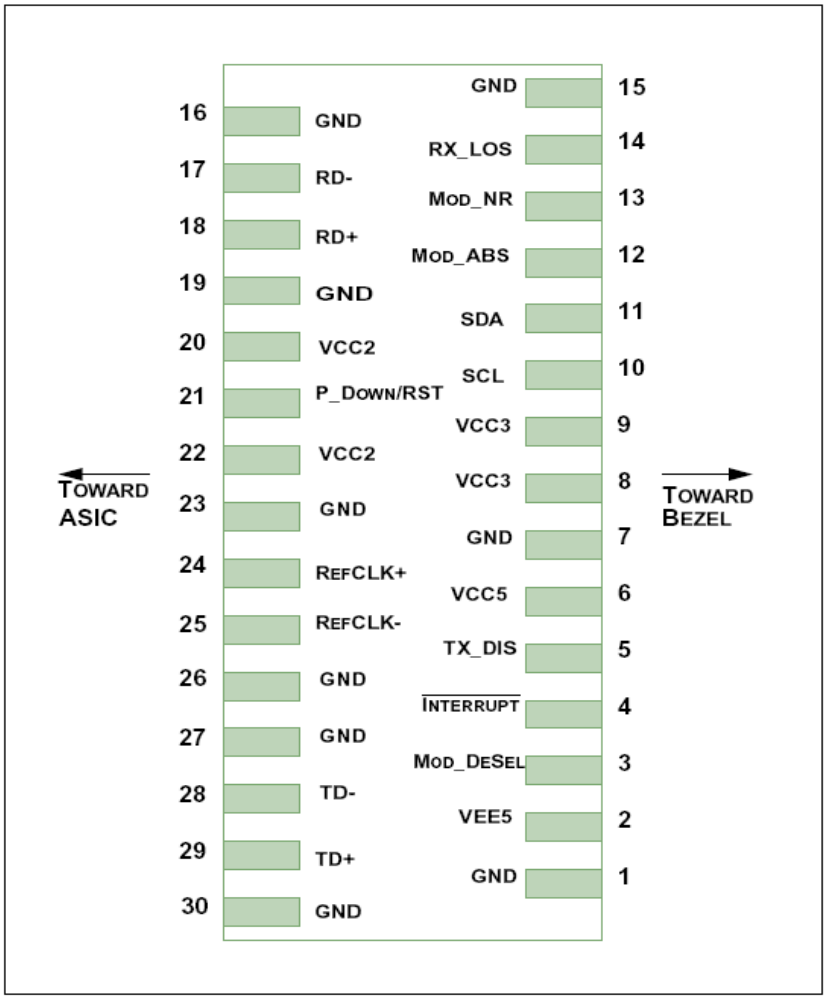

Interface to Host PCB

AIBAO reserves the right to make changes in the specification described hereinafter without prior notice.

AIBAO INTERNATIONAL LTD.
No.77, Shengli 6th St., Jhubei City,
Hsinchu County 302, Taiwan R.O.C.
Tel: +886-3-657-6363 Fax: +886-3-657-6963
http://www.aibaotech.com

Pin Descriptions

Pin#	Name	Logic	Descriptions	Note
1	GND		Module Ground	1
2	VEE5		0.2V Power Supply , **not in use**	3
3	MOD_DESEL	LVTTL-I	Module De-select; When held Low allows module to respond to 2-wire serial interface	
4	INTERRUPTb	LVTTL-O	Indicates presence of an important condition, which can be read over the 2-wire serial interface. This pin is an open collector output and must be pulled up to host_Vcc on the host board.	2
5	TX_DIS	LVTTL-I	Transmitter Disable; When asserted High, transmitter output is turned off. This pin is pulled up to VCC3 in the module	
6	VCC5		+5V Power Supply, **not in use**	3
7	GND		Module Ground	1
8	VCC3		+3.3V Power Supply	
9	VCC3		+3.3V Power Supply	
10	SCL	I/O	2-wire serial interface clock. Host shall resistor connected to host_Vcc of +3.3V.	2
11	SDA	I/O	2-wire serial interface data. Host shall use a pull-up resistor connected to host_Vcc of +3.3V.	2
12	MOD_ABS	LVTTL-O	Indicates Module is not present. Host shall pull up this pin, and grounded in the module. "High" when the XFP module is absent from a host board.	2
13	MOD_NR	LVTTL-O	Module not ready; When High, Indicates Module Operational Fault. This pin is an open collector and must be pulled to host_Vcc on the host board.	2,4,5
14	RX_LOS	LVTTL-O	Receiver Loss of Signal; When high, indicates insufficient optical input power to the module. This pin is an open collector and must be pulled to host_Vcc on the host board.	2
15	GND		Module Ground	
16	GND		Module Ground	
17	RDN	CML-O	Receiver Inverted Data Output; AC coupled inside the module.	
18	RDP	CML-O	Receiver Non-Inverted Data Output; AC coupled in side the module.	
19	GND		Module Ground	1

AIBAO reserves the right to make changes in the specification described hereinafter without prior notice.

Aibaotech

AIBAO INTERNATIONAL LTD.
No.77, Shengli 6th St., Jhubei City,
Hsinchu County 302, Taiwan R.O.C.
Tel: +886-3-657-6363 Fax: +886-3-657-6963
http://www.aibaotech.com

Pin#	Name	Logic	Description	Note
20	VCC2		+1.8V Power Supply; **not in use**	3
21	P_DOWN/RST	LVTTL-I	Power down; When High, module is limited power mode. Low for normal operation. Reset; The falling edge indicates complete reset of the module. This pin is pulled up to VCC3 in the module.	
22	VCC2		+1.8V Power Supply; **not in use**	3
23	GND		Module Ground	1
24	REFCLKP	PECL-I	Reference clock Non-Inverted Input; not in use	
25	REFCLKN	PECL-I	Reference clock Inverted Input; not in use	
26	GND		Module Ground	1
27	GND		Module Ground	1
28	TDN	CML-I	Transmitter Inverted Data Input; AC coupled in side the module.	
29	TDP	CML-I	Transmitter Non-Inverted Data Input; AC coupled in side the module.	
30	GND		Module Ground	1

*Notes: 1. Module ground pins are isolated from the module case and chassis ground within the module.

2. Shall be pulled up with 4.7k to 10k ohm to a voltage between 3.15V and 3.45V on the host board.

3. Not connected internally.

4. Response time: typ. 20msec (XFP MSA Rev. 4.5≦1msec)

5. MOD_NR = (TX LOL) OR (RX LOL).

AIBAO reserves the right to make changes in the specification described hereinafter without prior notice.

Aibaotech

AIBAO INTERNATIONAL LTD.
No.77, Shengli 6th St., Jhubei City,
Hsinchu County 302, Taiwan R.O.C.
Tel: +886-3-657-6363 Fax: +886-3-657-6963
http://www.aibaotech.com

Absolute Maximum Ratings

Parameter	Symbol	Min	Max	Unit	Note
Storage Temperature	Tst	-40	85	degC	
Relative Humidity (non-condensation)	RH	-	85	%	
Operating Case Temperature	Topc	0	70	degC	1
Supply Voltage	VCC3	-0.5	3.6	V	
Voltage on LVTTL Input	Vilvttl	-0.5	VCC3+0.5	V	
LVTTL Output Current	Iolvttl	-	15	mA	
Voltage on Open Collector Output	Voco	0	6	V	
Receiver Input Optical Power(Average)	Mip	-	3	dBm	2

*Notes: 1. Ta: -10 to 60degC with 1.5m/s airflow with an additional heat sink.

2. Pin Receiver.

Recommended Operating Conditions and Supply Requirements

Parameters	Symbol	Min	Max	Unit
Operating Case Temperature	Topc	0	70	degC
Relative Humidity (non-condensing)	Rhop	-	85	%
Power Supply Voltage	VCC3	3.135	3.465	V
Power Supply Current	ICC3	-	700	mA
Total Power Consumption	Pd	-	2.0	W

Low Speed Control and Alarm Signals Electrical Interface

Parameters	Symbol	Min	Max	Units	Note
XFP Interrupt, Mod_NR, RX_LOS	Vol	0.0	0.4	V	1
	Voh	Vcc-0.5	Vcc+0.3		2
XFP TX_DIS, P_DOWN/RST	Vil	-0.3	0.8	V	3
	Vih	2.0	VCC3+0.3		4
XFP SCL and SDA Output	Vol	0.0	0.4	V	1
	Voh	Vcc-0.5	Vcc+0.3		2
XFP SCL and SDA Input	Vil	-0.3	VCC3*0.3	V	5

AIBAO reserves the right to make changes in the specification described hereinafter without prior notice.

AIBAO INTERNATIONAL LTD.
No.77, Shengli 6th St., Jhubei City,
Hsinchu County 302, Taiwan R.O.C.
Tel: +886-3-657-6363 Fax: +886-3-657-6963
http://www.aibaotech.com

	Vih	VCC3*0.7	VCC3+0.5		6
Capacitance for XFP SCL and SDA I/O pin	Ci	-	14	pF	
Total bus capacitive load for SCL and SDA	Cb	-	100	pF	7
			400	pF	8

*Notes: 1. Pull-up resistor must be connected to host_Vcc on the host board. Iol(max)=3mA

2. Pull-up resistor must be connected to host_Vcc on the host board.

3. Pull-up resistor connected to VCC3 within XFP module. Iil(max)= -10μA.

4. Pull-up resistor connected to VCC3 within XFP module. Iih(max)= 10μA.

5. Pull-up resistor must be connected to host_Vcc on the host board. Iol(max)= -10μA.

6. Pull-up resistor must be connected to host_Vcc on the host board. Iol(max)= 10μA.

7. At 400KHz, 3.0kohms, at 100kHz 8.0kohms max.

8. At 400KHz, 0.8kohms, at 100kHz 2.0kohms max.

Optical Interface

Transmitter Optical Interface						
Parameter	**Symbol**	**Min**	**Typical**	**Max**	**Unit**	**Note**
Operating Data Rate	-	9.95		10.70	Gb/s	1
Output Center Wavelength	ltc	1290	1310	1330	nm	
Spectral Width	dl	-		1	nm	
SMSR	SMSR	30		-	dB	
Average Output Power	Po	-8		0	dBm	2
Disabled Power	Poff	-		-30	dBm	2
Extinction Ratio	ER	6		-	dB	2
Minimum OMA (10G Ethernet)	OMA	0.2		-	dBm	3
Minimum OMA-TDP (10G Ethernet)	OMAtdp	-6.2		-	dBm	3
Eye Mask 1 (SONET/SDH)		GR-253-CORE/ITU-T G.691				2
Eye Mask 2 (10G Ethernet)		IEEE802.3ae				3
Generation Jitter 1 (20kHz - 80MHz)		-		0.15	UIp-p	2,4
Generation Jitter 2 (4MHz - 80MHz)		-		0.1	UIp-p	2,4
RIN	RIN	-		-128	dB/Hz	
Optical Path						

AIBAO reserves the right to make changes in the specification described hereinafter without prior notice.

AIBAO INTERNATIONAL LTD.
No.77, Shengli 6th St., Jhubei City,
Hsinchu County 302, Taiwan R.O.C.
Tel: +886-3-657-6363 Fax: +886-3-657-6963
http://www.aibaotech.com

Parameter	Symbol	Min	Typical	Max	Unit	Note
Chromatic Dispersion (SONET/SDH)	CD	-		6.6	ps/nm	
Operating Distance (10G Ethernet)		-		10	km	
Attenuation (SONET/SDH)		0		4	dB	
Channel Insertion Loss (10G Ethernet)		0		6	dB	
Maximum DGD (SONET/SDH)	DGD	-		30	ps	
Optical Path						
Parameter	**Symbol**	**Min**	**Typical**	**Max**	**Unit**	**Note**
Operating Data Rate	-	9.95		10.70	Gb/s	1
Input Center Wavelength	lrc	1260		1565	nm	
Overload	Rovl	0.5		-	dBm	
Minimum Sensitivity	Pmin	-	-14	-11	dBm	2
Sensitivity in OMA	OMA0	-		-12.6	dBm	3
Stressed Sensitivity in OMA	OMAst	-		-10.3	dBm	3
RX_LOS Assert Level	RLOSa	-30		-25	dBm	
RX_LOS Deassert Level	RLOSd			-22	dBm	
RX_LOS Hysteresis	RLOSh	1		5	dB	
Optical Path Penalty	PN	-		1	dB	1
Optical Return Loss	ORL	14		-	dB	
Jitter Tolerance	JTL	GR-253-CORE/ITU-T G.783				

*Notes: 1. Data rate tolerance

- SONET SR-1,10GBASE-LW:typ.+/-20ppm
- 10GBASE-LR: typ.+/-100ppm

2. Measured at 10.3125Gbps,Non-framed PRBS2^31-1,NRZ
3. Measured by using Aibaotech's XFP evaluation board.

AIBAO reserves the right to make changes in the specification described hereinafter without prior notice.

Aibaotech

AIBAO INTERNATIONAL LTD.
No.77, Shengli 6th St., Jhubei City,
Hsinchu County 302, Taiwan R.O.C.
Tel: +886-3-657-6363 Fax: +886-3-657-6963
http://www.aibaotech.com

Mechanical Dimensions

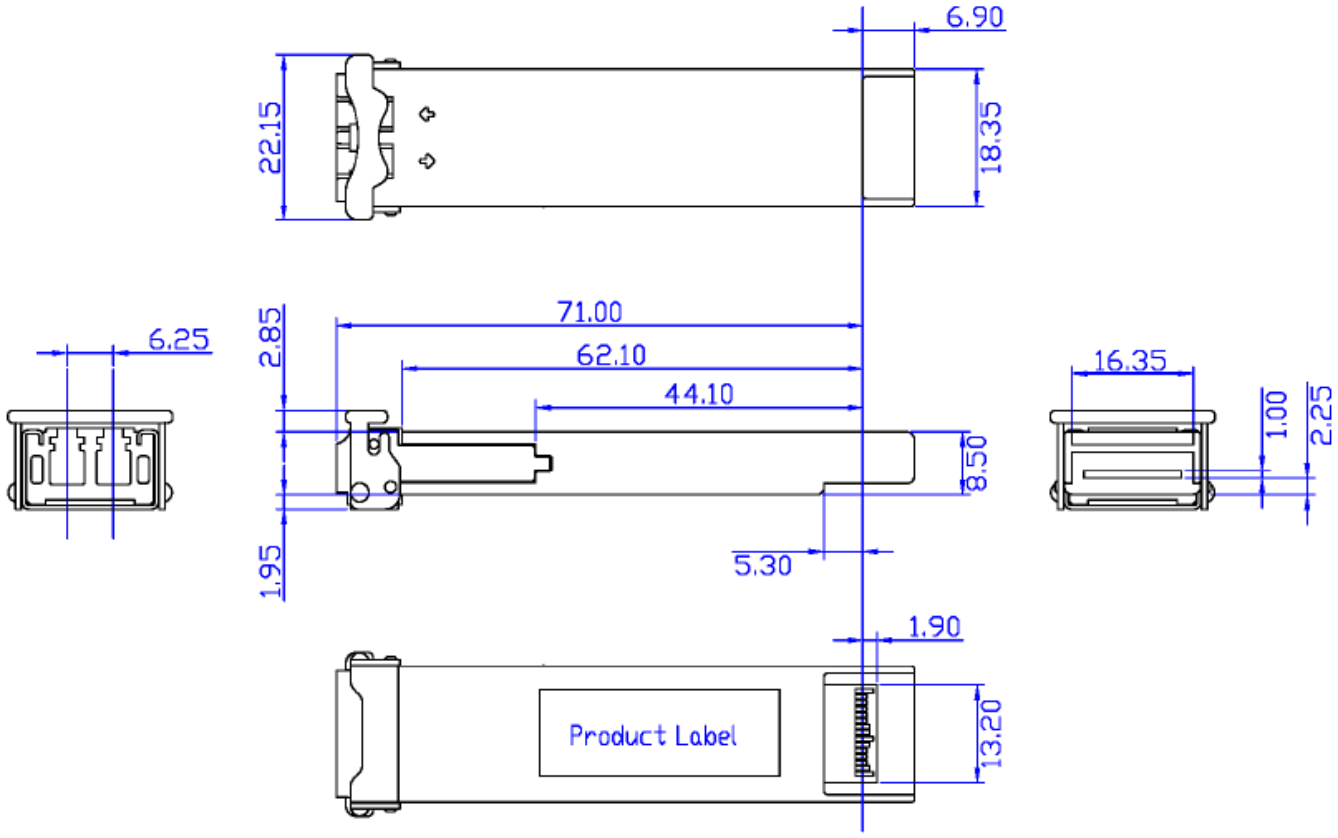

AIBAO reserves the right to make changes in the specification described hereinafter without prior notice.

AIBAO INTERNATIONAL LTD.
No.77, Shengli 6th St., Jhubei City,
Hsinchu County 302, Taiwan R.O.C.
Tel: +886-3-657-6363 Fax: +886-3-657-6963
http://www.aibaotech.com

ESD

This transceiver is specified as ESD threshold 2kV for all electrical input pins, tested per MIL-STD-883, Method 3015.4 /JESD22-A114-A (HBM). However, normal ESD precautions are still required during the handling of this module. This transceiver is shipped in ESD protective packaging. It should be removed from the packaging and handled only in an ESD protected environment.

Safety Information

- All versions of this laser are Class 1 laser products per IEC* 60825-1:2001. Users should observe safety precautions such as those recommended by ANSI** Z136.1-2000, ANSI Z36.2-1997 and IEC 60825-1:2001.
- Caution: use of controls or adjustments or performance of procedures other than those specified herein may result in hazardous radiation exposure.

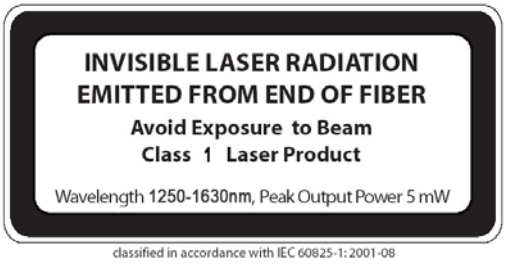

*IEC is a registered trademark of the International Electrotechnical Commission

**ANSI is a registered trademark of the American National Standards Institute

AIBAO reserves the right to make changes in the specification described hereinafter without prior notice.

AIBAO INTERNATIONAL LTD.
No.77, Shengli 6th St., Jhubei City,
Hsinchu County 302, Taiwan R.O.C.
Tel: +886-3-657-6363 Fax: +886-3-657-6963
http://www.aibaotech.com