10Gb/s SFP+ LR SONET version
1310nm DFB with PIN Receiver; Built-in CDR for SONET
10km transmission distance

AB-SFP+-LR-OC192
Ver. A

Feature

- 10Gb/s serial optical interface compliant to SONET OC192/SDH STM64 and 802.3ae 10GBASE-LR
- Built-in CDR on RX side with very low jitter (<0.18UI) enabling direct and longer connection between transceiver module and host board ASIC
- Built-in CDR on TX side with high input jitter(up to 0.61UI) allowing direct link from host board ASIC to module
- Electrical interface compliant to SFF-8431 specifications for enhanced 8.5 and 10 Gigabit small form factor pluggable module "SFP+"
- 1310nm DFB transmitter, PIN photo-detector
- 2-wire interface for management specifications compliant with SFF 8472 digital diagnostic monitoring interface for optical transceivers
- Advanced firmware allow customer system encryption information to be stored in transceiver
- Cost effective SFP+ solution, enables higher port densities and greater bandwidth

Application

- SONET(OC-192)/SDH(STM64) line card
- 10GBASE-LR (10.3125Gbps)
- 10GBASE-LW (9.953Gbps)
- High-speed storage area networks
- Computer cluster cross-connect

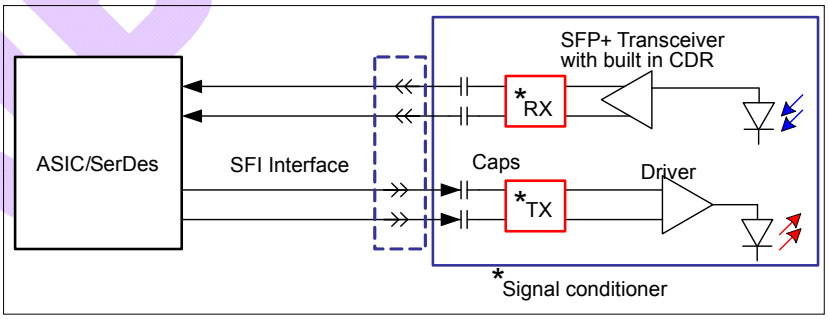

Figure1: Application in System

AIBAO reserves the right to make changes in the specification described hereinafter without prior notice.

AIBAO INTERNATIONAL LTD.
No.77, Shengli 6th St., Jhubei City,
Hsinchu County 302, Taiwan R.O.C.
Tel: +886-3-657-6363 Fax: +886-3-657-6963
http://www.aibaotech.com

AIBAOTECH

1. GENERAL DESCRIPTION

The AB-SFP+-LR-OC192 is a very compact 10Gb/s optical transceiver module for serial optical communication applications at 10Gb/s. The AB-SFP+-LR-OC192 converts a 10Gb/s serial electrical data stream to 10Gb/s optical output signal and a 10Gb/s optical input signal to 10Gb/s serial electrical data streams. The high speed 10Gb/s electrical interface is fully compliant with XFI specification (built in CDR on both TX and RX) and allows FR4 host PCB trace up to 200mm. The AB-SFP+-LR-OC192 is designed for use in a variety of 10Gb/s equipment SDH/SONET (9.95 Gb/s), Ethernet LAN (10.3Gb/s) and FC (10.5Gb/s). The high performance 1310nm DFB transmitter coupled with a high sensitivity PIN receiver provide superior performance for applications up to 10km SMF. The fully compliant SFP form factor provides high density applications, hot plug ability, easy optical port upgrades and low EMI emission.

The SFP+ LR w/CDR module electrical interface is compliant to XFI electrical specifications. The transmitter input and receiver output impedance is 100 Ohms differential. Data lines are internally AC coupled. The module provides differential termination and reduce differential to common mode conversion for quality signal termination and low EMI. XFI typically operates over 200 mm of improved FR4 material or up to about 150mmof standard FR4 with one connector.

The transmitter converts 10Gbit/s serial PECL or CML electrical data into serial optical data compliant with the 10GBASE-LR standard. An open collector compatible Transmit Disable (Tx_Dis) is provided. A logic “1,” or no connection on this pin will disable the laser from transmitting. A logic “0” on this pin provides normal operation. The transmitter has an internal automatic power control loop (APC) to ensure constant optical power output across supply voltage and temperature variations. An open collector compatible Transmit Fault (Tx_Fault) is provided. TX_Fault is a module output contact that when high, indicates that the module transmitter has detected a fault condition related to laser operation or safety. The TX_Fault output contact is an open drain/collector and shall be pulled up to the Vcc_Host in the host with a resistor in the range 4.7-10 kΩ. TX_Disable is a module input contact. When TX_Disable is asserted high or left open, the SFP+ module transmitter output shall be turned off. This contact shall be pulled up to VccT with a 4.7 kΩ to 10 kΩ resistor

The receiver converts 10Gbit/s serial optical data into serial PECL/CML electrical data. An open collector compatible Loss of Signal is provided. Rx_LOS when high indicates an optical signal level below that specified in the relevant standard.

AIBAO reserves the right to make changes in the specification described hereinafter without prior notice.

AIBAO INTERNATIONAL LTD.
No.77, Shengli 6th St., Jhubei City,
Hsinchu County 302, Taiwan R.O.C.
Tel: +886-3-657-6363 Fax: +886-3-657-6963
http://www.aibaotech.com

AIBAOTECH

The Rx_LOS contact is an open drain/collector output and shall be pulled up to Vcc_Host in the host with a resistor in the range 4.7-10 kΩ, or with an active termination. Power supply filtering is recommended for both the transmitter and receiver. The Rx_LOS signal is intended as a preliminary indication to the system in which the SFP+ is installed that the received signal strength is below the specified range. Such an indication typically points to non-installed cables, broken cables, or a disabled, failing or a powered off transmitter at the far end of the cable.

2. PROPOSED APPLICATION SCHEMATICS

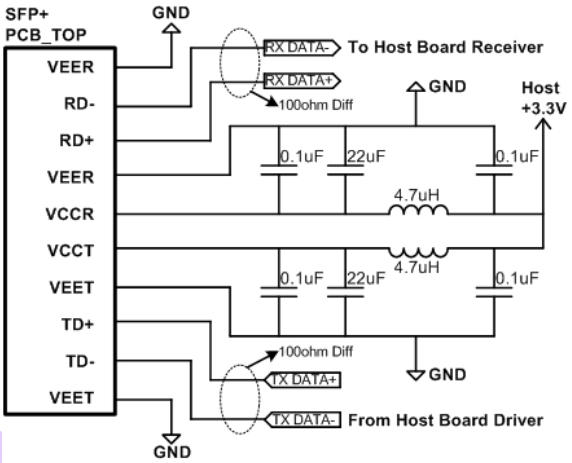

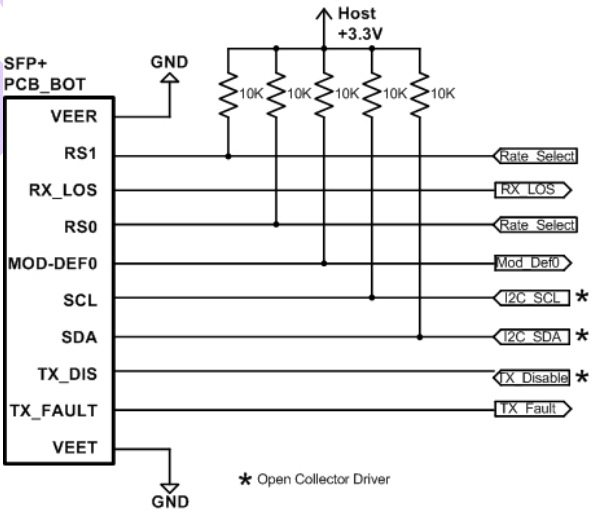

AIBAO reserves the right to make changes in the specification described hereinafter without prior notice.

AIBAO INTERNATIONAL LTD.
No.77, Shengli 6th St., Jhubei City,
Hsinchu County 302, Taiwan R.O.C.
Tel: +886-3-657-6363 Fax: +886-3-657-6963
http://www.aibaotech.com

3. PIN DEFINITION

The SFP+ modules are hot-pluggable. Hot pluggable refers to plugging in or unplugging a module while the host board is powered. The SFP+ host connector is a 0.8 mm pitch 20 position right angle improved connector specified by SFF-8083, or stacked connector with equivalent with equivalent electrical performance. Host PCB contact assignment is shown in Figure 2 and contact definitions are given in Table 2. SFP+ module contacts mates with the host in the order of ground, power, followed by signal as illustrated by Figure 3 and the contact sequence order listed in Table 2.

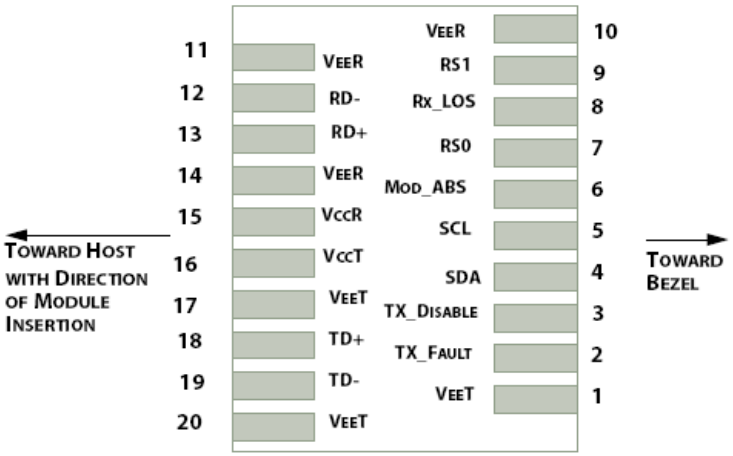

Figure 2: Module Interface to Host

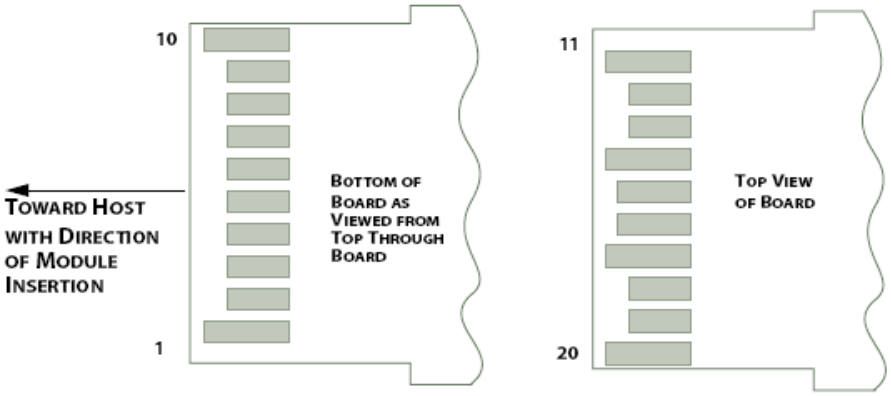

Figure 3: Module Contact Assignment

AIBAO reserves the right to make changes in the specification described hereinafter without prior notice.

AIBAO INTERNATIONAL LTD.
No.77, Shengli 6th St., Jhubei City,
Hsinchu County 302, Taiwan R.O.C.
Tel: +886-3-657-6363 Fax: +886-3-657-6963
http://www.aibaotech.com

PIN	Logic	Symbol	Name / Description	Note
1		VeeT	Module Transmitter Ground	1
2	LVTTL-O	TX_Fault	Module Transmitter Fault	
3	LVTTL-I	TX_Dis	Transmitter Disable; Turns off transmitter laser output	
4	LVTTL-I/O	SDA	2-Wire Serial Interface Data Line	2
5	LVTTL-I	SCL	2-Wire Serial Interface Clock	2
6		MOD_DEF0	Module Definition, Grounded in the module	
7	LVTTL-I	RS0	Receiver Rate Select	
8	LVTTL-O	RX_LOS	Receiver Loss of Signal Indication Active High	
9	LVTTL-I	RS1	Transmitter Rate Select	
10		VeeR	Module Receiver Ground	1
11		VeeR	Module Receiver Ground	1
12	CML-O	RD-	Receiver Inverted Data Output	
13	CML-O	RD+	Receiver Data Output	
14		VeeR	Module Receiver Ground	1
15		VccR	Module Receiver 3.3 V Supply	
16		VccT	Module Receiver 3.3 V Supply	
17		VeeT	Module Transmitter Ground	1
18	CML-I	TD+	Transmitter Non-Inverted Data Input	
19	CML-I	TD-	Transmitter Inverted Data Input	
20		VeeT	Module Transmitter Ground	1

Note:

1. Module ground pins GND are isolated from the module case.
2. Shall be pulled up with 4.7K-10Kohms to a voltage between 3.15V and 3.45V on the host board.

AIBAO reserves the right to make changes in the specification described hereinafter without prior notice.

Aibaotech

AIBAO INTERNATIONAL LTD.
No.77, Shengli 6th St., Jhubei City,
Hsinchu County 302, Taiwan R.O.C.
Tel: +886-3-657-6363 Fax: +886-3-657-6963
http://www.aibaotech.com

4. TRANSCEIVER BLOCK DIAGRAM

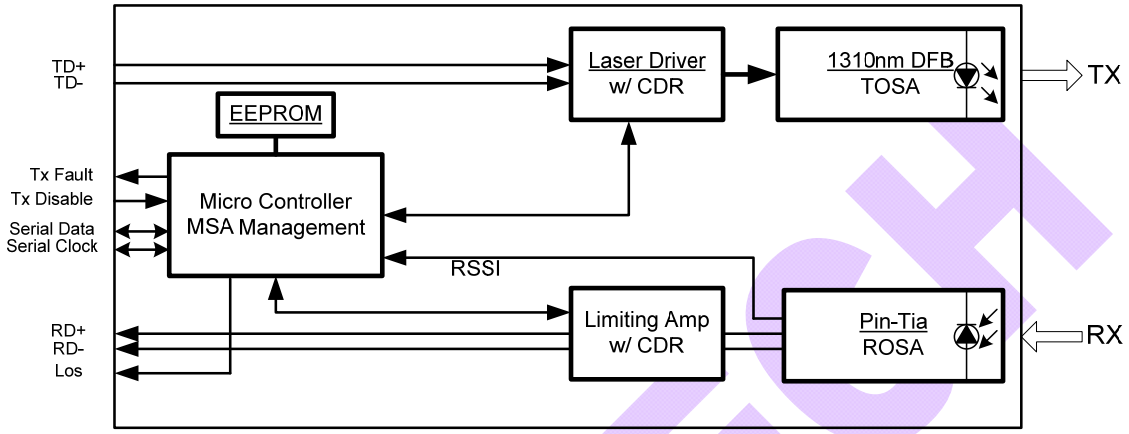

5. ABSOLUTE MAXIMUM RATING

Parameters	Symbol	Min.	Max.	Unit
Power Supply Voltage	V_{CC}	0	3.6	V
Storage Temperature	Tc	-40	85	°C
Operating Case Temperature	Tc	0	70	°C
Relative Humidity	RH	5	95	%
RX Input Average Power	Pmax	-	0	dBm

6. RECOMMENDED OPERATING ENVIRONMENT

Parameters	Symbol	Min.	Typical	Max	Unit
Power Supply Voltage	V_{CC}	3.135	3.3	3.465	V
Power Supply Current	Icc			300	mA
Operating Case Temperature, NCR	T_{C-N}	0	25	70	°C

AIBAOTECH

AIBAO reserves the right to make changes in the specification described hereinafter without prior notice.

Aibaotech

AIBAO INTERNATIONAL LTD.
No.77, Shengli 6th St., Jhubei City,
Hsinchu County 302, Taiwan R.O.C.
Tel: +886-3-657-6363 Fax: +886-3-657-6963
http://www.aibaotech.com

7. OPTICAL CHARACTERISTICS

Transmitter Optical Interface						
Parameter	**Symbol**	**Min**	**Typical**	**Max**	**Unit**	**Note**
Operating Data Rate	-	9.95		10.70	Gb/s	1
Output Center Wavelength	ltc	1290	1310	1330	nm	
Spectral Width	dl	-		1	nm	
SMSR	SMSR	30		-	dB	
Average Output Power	Po	-6		-1	dBm	2
Disabled Power	Poff	-		-30	dBm	2
Extinction Ratio	ER	6		-	dB	2
Minimum OMA-TDP (10G Ethernet)	OMAtdp	-5.2		-	dBm	3
Eye Mask 1(SONET/SDH)		GR-253-CORE/ITU-T G.691				2
Eye Mask 2 (10G Ethernet)		IEEE802.3ae				3
Generation Jitter 1 (20kHz - 80MHz)		-		0.15	UIp-p	2,4
Generation Jitter 2 (4MHz - 80MHz)		-		0.1	UIp-p	2,4
RIN	RIN	-		-128	dB/Hz	
Optical Path						
Parameter	**Symbol**	**Min**	**Typical**	**Max**	**Unit**	**Note**
Chromatic Dispersion (SONET/SDH)	CD	-		6.6	ps/nm	
Operating Distance (10G Ethernet)		-		10	km	
Attenuation (SONET/SDH)		0		4	dB	
Channel Insertion Loss (10G Ethernet)		0		6	dB	
Maximum DGD (SONET/SDH)	DGD	-		30	ps	

AIBAO reserves the right to make changes in the specification described hereinafter without prior notice.

AIBAO INTERNATIONAL LTD.
No.77, Shengli 6th St., Jhubei City,
Hsinchu County 302, Taiwan R.O.C.
Tel: +886-3-657-6363 Fax: +886-3-657-6963
http://www.aibaotech.com

Receiver Optical Interface						
Parameter	**Symbol**	**Min**	**Typical**	**Max**	**Unit**	**Note**
Operating Data Rate	-	9.95		10.70	Gb/s	1
Input Center Wavelength	lrc	1260		1565	nm	
Overload	Rovl	0.5		-	dBm	
Minimum Sensitivity	Pmin	-	-18	-14.6	dBm	2
Sensitivity in OMA	OMA0	-		-12.6	dBm	3
Stressed Sensitivity in OMA	OMAst	-		-10.3	dBm	3
RX_LOS Assert Level	RLOSa	-25			dBm	
RX_LOS Deassert Level	RLOSd			-15	dBm	
RX_LOS Hysteresis	RLOSh	1		5	dB	
Optical Path Penalty	PN	-		1	dB	1
Optical Return Loss	ORL	14		-	dB	
Jitter Tolerance	JTL	GR-253-CORE/ITU-T G.783				

Notes:

1. Data rate tolerance
2. 10GBASE-LR/LW: typ.+/-100ppm
3. Measured at 10.3125Gbps,Non-framed PRBS2^31-1,NRZ
4. Measured by using Aibaotech SFP+ evaluation board.

8. DIGITAL DIAGNOSTIC FUNCTIONS

Parameter	Symbol	Min.	Max	Unit	Notes
Temperature monitor absolute error	DMI_Temp	-3	3	degC	Over operating temp
Laser power monitor absolute error	DMI_TX	-3	3	dB	
RX power monitor absolute error	DMI_RX	-3	3	dB	-1dBm to -15dBm range
Supply voltage monitor absolute error	DMI_VCC	-0.08	0.08	V	Full operating range
Bias current monitor	DMI_Ibias	-10%	10%	mA	

AIBAO reserves the right to make changes in the specification described hereinafter without prior notice.

Aibaotech

AIBAO INTERNATIONAL LTD.
No.77, Shengli 6th St., Jhubei City,
Hsinchu County 302, Taiwan R.O.C.
Tel: +886-3-657-6363 Fax: +886-3-657-6963
http://www.aibaotech.com

9. ELECTRICAL CHARACTERISTICS

The following electrical characteristics are defined over the Recommended Operating Environment unless otherwise specified.

Parameter	Symbol	Min.	Typical	Max	Unit	Notes
Data Rate		-	10.3125	-	Gbps	
Power Consumption		-	800	1000	mW	
Transmitter						
Single Ended Output Voltage Tolerance		-0.3	-	4	V	
C common mode voltage tolerance		15	-	-	mV	
Tx Input Diff Voltage	VI	180		700	mV	
Tx Fault	VoL	-0.3		0.4	V	At 0.7mA
Data Dependent Input Jitter	DDJ			0.1	UI	
Data Input Total Jitter	TJ			0.28	UI	
Receiver						
Single Ended Output Voltage Tolerance		-0.3	-	4	V	
Rx Output Diff Voltage	Vo	300		850	mV	
Rx Output Rise and Fall Time	Tr/Tf	30			ps	20% to 80%
Total Jitter	TJ			0.7	UI	
Deterministic Jitter	DJ			0.42	UI	

AIBAOTECH

AIBAO reserves the right to make changes in the specification described hereinafter without prior notice.

Aibaotech

AIBAO INTERNATIONAL LTD.
No.77, Shengli 6th St., Jhubei City,
Hsinchu County 302, Taiwan R.O.C.
Tel: +886-3-657-6363 Fax: +886-3-657-6963
http://www.aibaotech.com

10. CONTROL AND STATUS I/O TIMING CHARACTERISTICS

Timing characteristics of control and status I/O are included in Table 8, which is also defined in SFF-8431.

Parameter	Symbol	Min	Max	Unit	Condition
TX Disable Assert Time	t_off		10	µs	Time from rising edge of TX Disable to when the optical output falls below 10% of nominal
TX Disable Negate Time	t_on		1	ms	Time from falling edge of TX Disable to when the modulated optical output rises above 90% of nominal
Time to initialize, including reset of TX_Fault	t_init		300	ms	From power on or negation of TX Fault using TX Disable
TX Fault Assert Time	t_fault		100	µs	Time from fault to TX fault on.
TX Disable to reset	t_reset	10		µs	Time TX Disable must be held high to reset TX_fault
LOS Assert Time	t_loss_on		100	µs	Time from LOS state to RX LOS assert
LOS Deassert Time	t_loss_off		100	µs	Time from non-LOS state to RX LOS deassert
Rate-Select Change Time	t_ratesel		10	µs	Time from rising or falling edge of Rate Select input until receiver bandwidth is in conformance with appropriate specification.
Serial ID Clock Rate	f_serial_clock		100	kHz	

AIBAO reserves the right to make changes in the specification described hereinafter without prior notice.

AIBAO INTERNATIONAL LTD.
No.77, Shengli 6th St., Jhubei City,
Hsinchu County 302, Taiwan R.O.C.
Tel: +886-3-657-6363 Fax: +886-3-657-6963
http://www.aibaotech.com

11. MECHANICAL

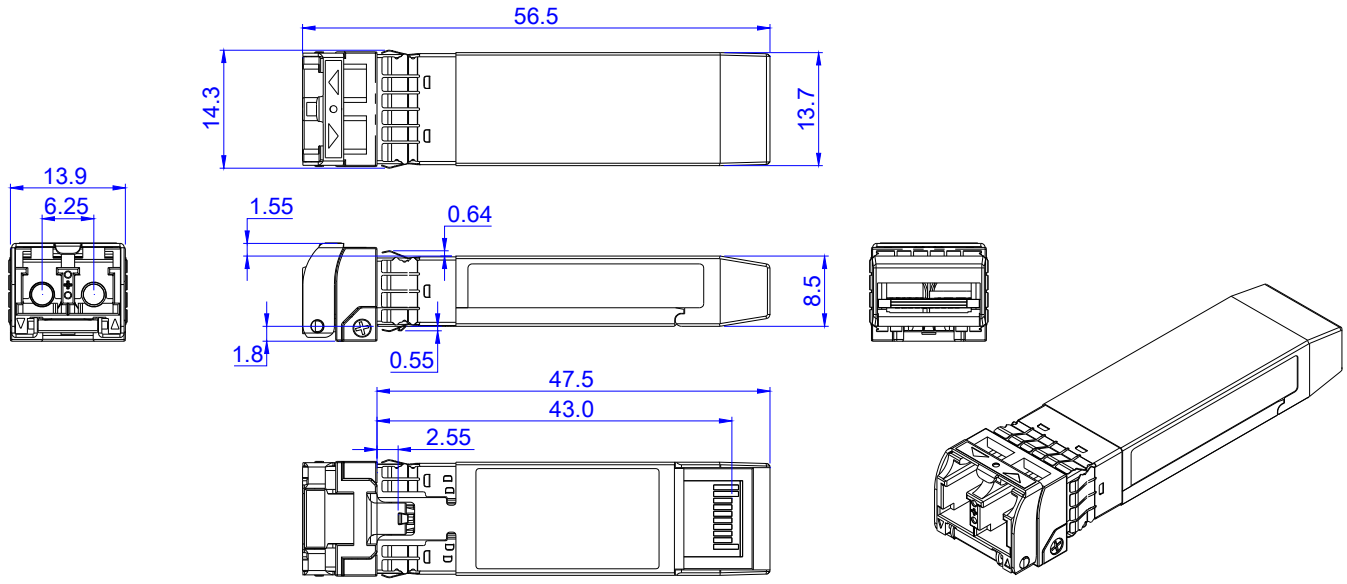

All dimensions are ±0.2mm unless otherwise specified

AIBAO

AIBAO reserves the right to make changes in the specification described hereinafter without prior notice.

Aibaotech

AIBAO INTERNATIONAL LTD.
No.77, Shengli 6th St., Jhubei City,
Hsinchu County 302, Taiwan R.O.C.
Tel: +886-3-657-6363 Fax: +886-3-657-6963
http://www.aibaotech.com

12. ESD

This transceiver is specified as ESD threshold 2kV for all electrical input pins, tested per MIL-STD-883, Method 3015.4 /JESD22-A114-A (HBM). However, normal ESD precautions are still required during the handling of this module. This transceiver is shipped in ESD protective packaging. It should be removed from the packaging and handled only in an ESD protected environment.

13. LASER SAFTY

This is a Class 1 Laser Product according to IEC 60825-1:1993:+A1:1997+A2:2001. This product complies with 21 CFR 1040.10 and 1040.11 except for deviations pursuant to Laser Notice No. 50, dated (July 26, 2001)

Caution: use of controls or adjustments or performance of procedures other than those specified herein may result in hazardous radiation exposure.

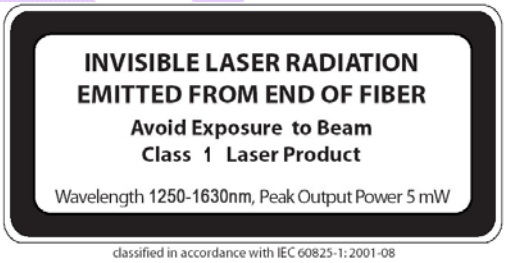

*IEC is a registered trademark of the International Electrotechnical Commission

**ANSI is a registered trademark of the American National Standards Institute

AIBAOTECH

Aibaotech

AIBAO INTERNATIONAL LTD.
No.77, Shengli 6th St., Jhubei City,
Hsinchu County 302, Taiwan R.O.C.
Tel: +886-3-657-6363 Fax: +886-3-657-6963
http://www.aibaotech.com